Shenzhen CTL Testing Technology Co., Ltd.
Tel: +86-755-89486194 E-Mail: ctl@ctl-lab.com

TEST REPORT

EN 55014-1 / EN 55014-2

Electromagnetic compatibility – Requirements for household appliances, electric tools and similar apparatus.

Part 1: Emission / Part 2: Immunity – Product family standard

Original No......:	**CTL2005074071-E**
Report Reference No.....:	**CTL2007134031-E**
Compiled by (position+printed name+signature)..:	File administrators Rambo Li
Supervised by (position+printed name+signature)..:	Technique principal Ivan Xie
Approved by (position+printed name+signature)..:	Manager Tracy Qi
Date of issue.....:	July 14, 2020
Testing Laboratory Name.....:	**Shenzhen CTL Testing Technology Co., Ltd**
Address.....:	Floor 1-A, Baisha Technology Park, No.3011, Shahexi Road, Nanshan District, Shenzhen, China 518055
Testing location/ procedure.....:	Full application of Harmonised standards ☒ Partial application of Harmonised standards ☐ Other standard testing methods ☐
Applicant's name.....:	**NEVADA TRADING SRL**
Address.....:	Via Torino, 2-20123 MILANO
Test specification:	
Standard.....:	**EN 55014-1: 2017** **EN 55014-2: 2015** **EN 61000-3-2: 2019** **EN 61000-3-3: 2013+A1: 2019**
Non-standard test method.....:	/
TRF Originator.....:	Shenzhen CTL Testing Technology Co., Ltd

Test item description.....:	**UV disinfection lamp**
Trade Mark.....:	NEVLIGHT HEALTHCARE
Test voltage.....:	AC 220V/50Hz
Result.....:	Pass

E M C -- T E S T R E P O R T

Test Report No. :	CTL2007134031-E	July 14, 2020 Date of issue

Equipment under Test	:	UV disinfection lamp
Model No.	:	NLUVZKZ2100
Listed Models	:	NLUVY1000, NLUVY1200, NLUVZXC60, NLUVZXC60A, NLUVZXC120, NLUVZXC120A, NLUVSM20, NLUVSM15
Applicant	:	**NEVADA TRADING SRL**
Address	:	Via Torino, 2-20123 MILANO
Manufacturer	:	**NEVADA TRADING SRL**
Address	:	Via Torino, 2-20123 MILANO

Test Result	Pass

The test report merely corresponds to the test sample.
It is not permitted to copy extracts of these test result without the written permission of the test laboratory.

History of this test report

Report No.	Version	Description	Issued Date
CTL2005074071-E	V1.0	Initial Issued Report	May 28, 2020
CTL2007134031-E	V2.0	Increase series model	July 14, 2020

Contents

1. TEST STANDARDS

The tests were performed according to following standards:

EN 55014-1: 2017 Electromagnetic compatibility - Requirements for household appliances, electric tools and similar apparatus -- Part 1: Emission
EN 55014-2: 2015 Electromagnetic compatibility - Requirements for household appliances, electric tools and similar apparatus -- Part 2: Immunity - Product family standard
EN 61000-3-2: 2019 Electromagnetic compatibility (EMC) -- Part 3-2: Limits - Limits for harmonic current emissions (equipment input current up to and including 16 A per phase)
EN 61000-3-3: 2013+A1: 2019 Electromagnetic compatibility (EMC) -- Part 3-3: Limits - Limitation of voltage changes, voltage fluctuations and flicker in public low-voltage supply systems, for equipment with rated current ≤ 16 A per phase and not subject to conditional connection

2. SUMMARY

2.1. General Remarks

Date of receipt of test sample : May 25, 2020

Sampling and Testing commenced on : May 25, 2020

Testing concluded on : May 28, 2020

2.2. Equipment Under Test

Power supply system utilised

Power supply voltage : ■ 220V / 50 Hz o 115V / 60Hz
o 12 V DC o 24 V DC
o Other (specified in blank below)

/

2.3. Description of test modes

RADIATED EMISSION TEST:

Description of Test Mode	Test Voltage
WORKING	AC 220V

IMMUNITY TESTS:

Description of Test Mode	Test Voltage
WORKING	AC 220V

Emissions tests……: According to EN 55014-1, searching for the highest disturbance.

Immunity tests ……..: According to EN 55014-2, searching for the highest susceptivity.

Harmonic current……. : According to EN 61000-3-2, searching for the highest disturbance.

Voltage fluctuation……. : According to EN 61000-3-3, searching for the highest disturbance.

Note:
For the test results, the EUT had been tested with all conditions. But only the worst case was showed in test report.

The tests are carried out with surge protective devices disconnected

2.4. Short description of the Equipment under Test (EUT)

The EUT is a UV disinfection lamp

2.5. Description of Support units

The EUT has been tested as a dependent unit together with other necessary accessories or support units. The following support units or accessories were used to form a representative test configuration during the tests.

■ - supplied by the manufacturer

o - supplied by the lab

NO.	PRODUCT	BRAND	MODEL NO.	SERIAL NO.

2.6. Performance level

Definition related to the performance level:

■ based on the used product standard
o based on the declaration of the manufacturer, requestor or purchaser

Criterion A:
Definition: normal performance within limits specified by the manufacturer, requestor or purchaser:

The apparatus shall continue to operate as intended during the test. No degradation of performance or loss of function is allowed below a performance level (or permissible loss of performance) specified by the manufacturer, when the apparatus is used as intended. If the minimum performance level or the permissible performance loss is not specified by the manufacturer, then either of these may be derived from the product description and documentation, and from what the user may reasonably expect from the apparatus if used as intended.

Criterion B:
Definition: temporary loss of function or degradation of performance which ceases after the disturbance ceases, and from which the equipment under test recovers its normal performance, without operator intervention:

The apparatus shall continue to operate as intended after the test. No degradation of performance or loss of function is allowed below a performance level (or permissible loss of performance) specified by the manufacturer, when the apparatus is used as intended. During the test, degradation of performance is allowed, however. No change of actual operating state or stored data is allowed. If the minimum performance level or the permissible performance loss is not specified by the manufacturer, then either of these may be derived from the product description and documentation, and from what the user may reasonably expect from the apparatus if used as intended.

Criterion C:
Definition: temporary loss of function or degradation of performance, the correction of which requires operator intervention:

Temporary loss of function is allowed, provided the function is self-recoverable or can be restored by the operation of the controls, or by any operation specified in the instructions for use.

3. TEST ENVIRONMENT

3.1. Address of the test laboratory

Shenzhen CTL Testing Technology Co., Ltd.
Floor 1-A, Baisha Technology Park, No. 3011, Shahexi Road, Nanshan, Shenzhen 518055 China

3.2. Test Facility

The test facility is recognized, certified, or accredited by the following organizations:

Certificated by CNAS
Registration No.:CNAS L7497
Date of issue:Oct. 24, 2019
Valid until:Feb. 14, 2024

Certificated by A2LA, USA
Registration No.:4343.01
Date of registration: December 27, 2017

IC Registration No.: 9618B

The 3m alternate test site of Shenzhen CTL Testing Technology Co., Ltd. EMC Laboratory has been registered by Certification and Engineer Bureau of Industry Canada for the performance of with Registration No.: 9618B on November 13, 2013.

FCC-Registration No.: 399832

Shenzhen CTL Testing Technology Co., Ltd. EMC Laboratory has been registered and fully described in a report filed with the (FCC) Federal Communications Commission. The acceptance letter from the FCC is maintained in our files. Registration 399832, December 08, 2017.

3.3. Test Description

Emission Measurement		
Conducted Disturbance	EN 55014-1: 2017	PASS
Power Clamp Radiation	EN 55014-1: 2017	PASS
Harmonic Current	EN 61000-3-2: 2019	N/A
Voltage Fluctuation and Flicker	EN 61000-3-3: 2013+A1: 2019	PASS
Immunity Measurement		
Electrostatic Discharge	EN 55014-2: 2015 EN 61000-4-2:2009	PASS
Electrical Fast Transient/Burst Test	EN 55014-2: 2015 EN 61000-4-4:2012	PASS
Surge Test	EN 55014-2: 2015 EN 61000-4-5:2017	PASS
Conducted Susceptibility Test	EN 55014-2: 2015 EN 61000-4-6:2014	PASS
Voltage Dips and Interruptions Test	EN 55014-2: 2015 EN 61000-4-11:2017	PASS

Remark:
1. The test result PASS and /or FAIL has no relationship with the measurement uncertainty.

3.4. Statement of the measurement uncertainty

The data and results referenced in this document are true and accurate. The reader is cautioned that there may be errors within the calibration limits of the equipment and facilities. The measurement uncertainty was calculated for all measurements listed in this test report acc. to CISPR 16 - 4 „Specification for radio disturbance and immunity measuring apparatus and methods – Part 4: Uncertainty in EMC Measurements“ and is documented in the Shenzhen CTL Testing Technology Co., Ltd. quality system acc. to DIN EN ISO/IEC 17025. Furthermore, component and process variability of devices similar to that tested may result in additional deviation. The manufacturer has the sole responsibility of continued compliance of the device.

Hereafter the best measurement capability for CTL laboratory is reported:

Test	Range	Measurement Uncertainty	Notes
Radiated Emission(chamber 1)	30~1000MHz	±3.20dB	(1)
Radiated Emission(chamber 2)	30~1000MHz	±3.53dB	(1)
Radiated Emission	Above 1GHz	±4.32dB	(1)
Conducted Emission	0.15~30MHz	±2.66dB	(1)
Disturbance Power	30~300MHz	±2.90dB	(1)

(1) This uncertainty represents an expanded uncertainty expressed at approximately the 95% confidence level using a coverage factor of k=2.

3.5. Equipments Used during the Test

Conducted Emission						
Item	Test Equipment	Manufacturer	Model No.	Serial No.	Last Cal.	Cal.Due
1	EMI Test Receiver	ROHDE & SCHWARZ	ESCI	1166.5950.03	2020/05/18	2021/05/17
2	LISN	ROHDE & SCHWARZ	ESH2-Z5	860014/010	2020/05/15	2021/05/14
3	Limitator	HP	11947A	N/A	2020/05/15	2021/05/14

Software:	
Name of Software:	Version:
ES-K1	V1.71

Conducted Susceptibility（CS）:						
Item	Test Equipment	Manufacturer	Model No.	Serial No.	Last Cal.	Cal.Due
1	Conducted Disturbances test system	SCHLODER	CDG 6000	N/A	2020/05/15	2021/05/14
2	Amplifier	SCHLODER	4N100W-6DB	N/A	2020/05/15	2021/05/14
3	CDN	SCHLODER	CDN M2+M3	A2210225/2013	2020/05/15	2021/05/14

Software:	
Name of Software:	Version:
IEC/EN61000-4-6 Application software 10KHz Version	1.2.0(25.03.2013)

Disturbance Power						
Item	Test Equipment	Manufacturer	Model No.	Serial No.	Last Cal.	Cal.Due
1	EMI Test Receiver	ROHDE & SCHWARZ	ESCI	1166.5950.03	2020/05/21	2021/05/20
2	Absorbing Clamp	Luthi	MDS 21	4035	2019/08/07	2020/08/06

Software:	
Name of Software:	Version:
ES-K1	V1.71

Harmonic Current/ Voltage Fluctuation and Flicker						
Item	Test Equipment	Manufacturer	Model No.	Serial No.	Last Cal.	Cal.Due
1	Harmonic And Flicker Analyzer	Voltech	PM6000	N/A	2020/05/23	2021/05/22

Software:	
Name of Software:	Version:
IEC61000-3 for PM6000	Release 1.24.12

Electrical Fast Transient/Surge/Dips						
Item	Test Equipment	Manufacturer	Model No.	Serial No.	Last Cal.	Cal.Due
1	Ultra Compact Simulator	HAEFELY	ECOMPACT4	174887	2019/09/23	2020/09/22

Software:	
Name of Software:	Version:
EMV Check 2000	V1.27b

Electrostatic Discharge						
Item	Test Equipment	Manufacturer	Model No.	Serial No.	Last Cal.	Cal.Due
1	ESD Simulator	TESEQ AG	NSG 437	1058	2019/09/24	2020/09/23

Remark:
1. The test result PASS and /or FAIL has no relationship with the measurement uncertainty.

4. TEST CONDITIONS AND RESULTS

4.1. Conducted disturbance

For test instruments and accessories used see section 3.5.

4.1.1. Description of the test location

Test location: Conduction Lab

4.1.2. Limits of disturbance

General limits

Frequency range	Mains ports		Associated ports			
	Disturbance voltage		Disturbance voltage		Disturbance current	
MHz	Quasi-peak dBμV	Average dBμV	Quasi-peak dBμV	Average dBμV	Quasi-peak dBμV	Average dBμV
0.15 to 0.50	Decreasing linearly with the logarithm of the frequency from:		80	70	Decreasing linearly with the logarithm of the frequency from:	
	66 to 56	59 to 46			40 to 30	30 to 20
0.50 to 5	56	46	74	64	30	20
5to 30	60	50	74	64		
The lower limit applies at the transition frequencies.						

Limits for mains port of tools

Frequency range	P ≤ 700 W		700W<P ≤ 1000 W		P> 1000 W	
MHz	Quasi-peak dBμV	Average dBμV	Quasi-peak dBμV	Average dBμV	Quasi-peak dBμV	Average dBμV
0,15 to 0,35	Decreasing linearly with the logarithm of the frequency from:					
	66 to 59	59 to 49	70 to 63	63 to 53	76 to 69	69 to 59
0,35 to 5	59	49	63	53	69	59
5 to 30	64	54	68	58	74	64
The lower limit applies at the transition frequencies. **Key** P = rated power of the motor only.						

Note: (1) The tighter limit shall apply at the edge between two frequency bands.

4.1.3. Description of the test set-up

According to clause 5.2.2.2 in EN 55014-1: 2017 “the general principle to be followed in the application of the artificial hand is that the metal foil shall be wrapped around all handles” and “when the casing of the appliance is of insulating material, metal foil shall be wrapped round the handles”, application of the artificial hand is used.

4.1.3.1. Operating Condition

The EUT shall operate in the mode of operation described in Section 2.3, and the maximum emanating results are recorded.

4.1.4. Test result

Frequency range	0.15-30MHz	Environmental conditions	Temperature	25℃
Detector function& Resolution bandwidth	Quasi-Peak,Average 9kHz		Humidity	55.0%RH

The requirements are **Fulfilled**

Remarks: The limits are kept. For detailed results, please see the following page(s).

Shenzhen CTL Testing Technology Co., Ltd.

Voltage Mains Test EN 55014-1

EUT: NLUVZKZ2100
Manufacturer: NEVADA TRADING SRL
Operating Condition: WORKING
Test Site: /
Operator: ZGH
Test Specification: AC 220V/50Hz
Comment: /
Start of Test: 2020-5-26 / 9:04:28

SCAN TABLE: "Voltage (9K-30M)FIN"
Short Description: 150K-30M Voltage

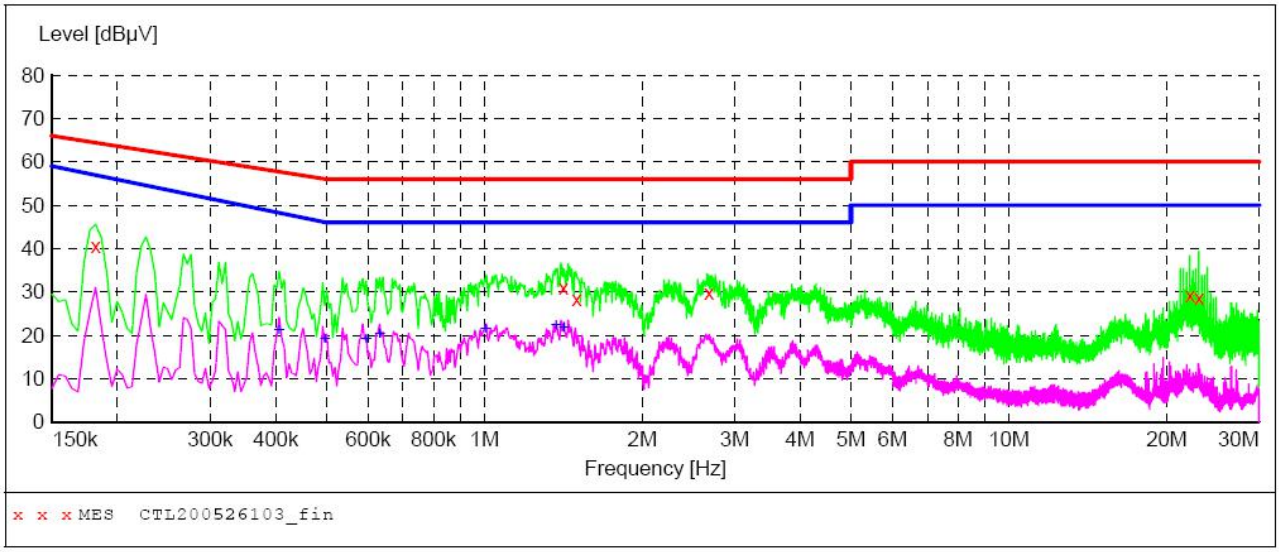

MEASUREMENT RESULT: "CTL200526103_fin"

2020-5-26 9:07

Frequency MHz	Level dBµV	Transd dB	Limit dBµV	Margin dB	Detector	Line	PE
0.181500	40.60	11.2	64	23.8	QP	N	GND
1.414500	31.00	11.2	56	25.0	QP	N	GND
1.500000	28.30	11.2	56	27.7	QP	N	GND
2.679000	29.80	11.3	56	26.2	QP	N	GND
22.132500	29.20	11.3	60	30.8	QP	N	GND
23.032500	28.70	11.3	60	31.3	QP	N	GND

MEASUREMENT RESULT: "CTL200526103_fin2"

2020-5-26 9:07

Frequency MHz	Level dBµV	Transd dB	Limit dBµV	Margin dB	Detector	Line	PE
0.406500	21.00	11.2	48	27.2	AV	N	GND
0.496500	19.00	11.2	46	27.1	AV	N	GND
0.595500	19.10	11.2	46	26.9	AV	N	GND
0.631500	20.10	11.2	46	25.9	AV	N	GND
1.005000	21.40	11.2	46	24.6	AV	N	GND
1.369500	22.10	11.2	46	23.9	AV	N	GND
1.419000	21.50	11.2	46	24.5	AV	N	GND

Shenzhen CTL Testing Technology Co., Ltd.

Voltage Mains Test EN 55014-1

EUT: NLUVZKZ2100
Manufacturer: NEVADA TRADING SRL
Operating Condition: WORKING
Test Site: /
Operator: ZGH
Test Specification: AC 220V/50Hz
Comment: /
Start of Test: 2020-5-26 / 9:07:51

SCAN TABLE: "Voltage (9K-30M)FIN"
Short Description: 150K-30M Voltage

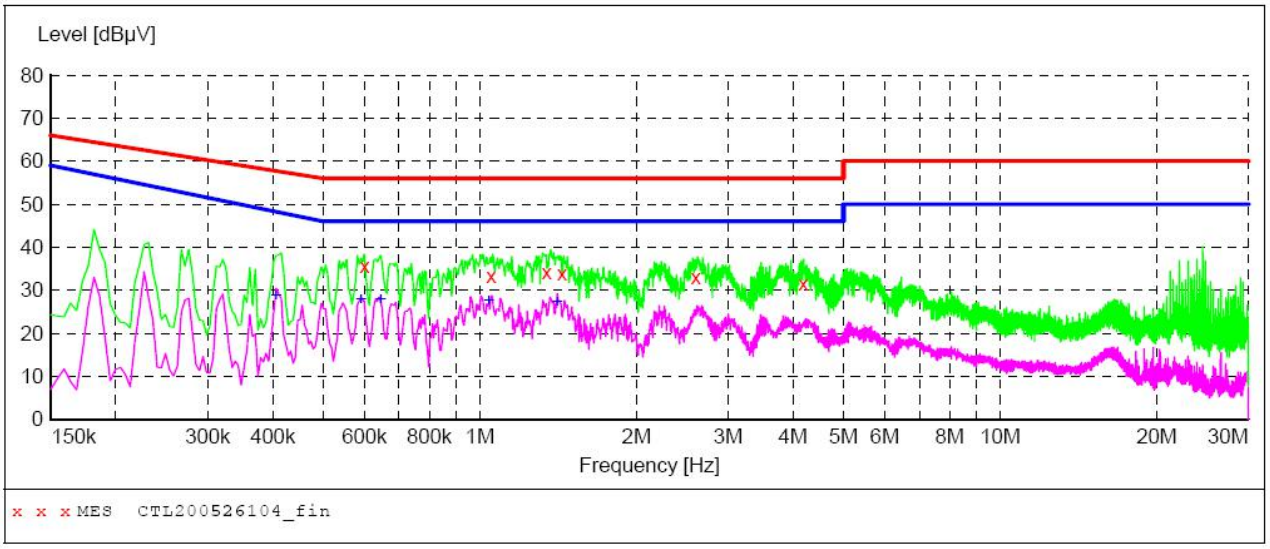

MEASUREMENT RESULT: "CTL200526104_fin"

2020-5-26 9:10

Frequency MHz	Level dBµV	Transd dB	Limit dBµV	Margin dB	Detector	Line	PE
0.600000	35.60	11.2	56	20.4	QP	L1	GND
1.050000	33.30	11.2	56	22.7	QP	L1	GND
1.342500	34.10	11.2	56	21.9	QP	L1	GND
1.437000	33.80	11.2	56	22.2	QP	L1	GND
2.598000	32.90	11.3	56	23.1	QP	L1	GND
4.182000	31.40	11.3	56	24.6	QP	L1	GND

MEASUREMENT RESULT: "CTL200526104_fin2"

2020-5-26 9:10

Frequency MHz	Level dBµV	Transd dB	Limit dBµV	Margin dB	Detector	Line	PE
0.406500	28.50	11.2	48	19.7	AV	L1	GND
0.591000	27.80	11.2	46	18.2	AV	L1	GND
0.645000	27.80	11.2	46	18.2	AV	L1	GND
1.041000	27.40	11.2	46	18.6	AV	L1	GND
1.410000	27.30	11.2	46	18.7	AV	L1	GND

4.2. Disturbance power

For test instruments and accessories used see section 3.5.

4.2.1. Description of the test location

Test location: Conduction Lab

4.2.2. Limits of disturbance

Frequency range	General		Tools					
			P ⩽ 700 W		700 W < P ⩽ 1 000 W		P > 1 000 W	
MHz	Quasi-peak dBpW	Average dBpW	Quasi-peak dBpW	Average dBpW	Quasi-peak dBpW	Average dBpW	Quasi-peak dBpW	Average dBpW
30 to 300	Increasing linearly with the frequency from:							
	45 to 55	35 to 45	45 to 55	35 to 45	49 to 59	39 to 49	55 to 65	45 to 55
Key P = rated power of the motor only.								

The EUT shall be also deemed to comply with the requirement of this standard in the frequency range from 300 MHz to 1 000 MHz without further testing if both conditions 1) and 2) below are fulfilled:
1) the disturbance power emission from the EUT is lower than the limits of the above table reduced by the values of the follow Table;
2) the maximum clock frequency is less than 30 MHz

Frequency range	General		Tools					
			P ⩽ 700 W		700 W < P ⩽ 1 000 W		P > 1 000 W	
MHz	Quasi-peak dBpW	Average dBpW	Quasi-peak dBpW	Average dBpW	Quasi-peak dBpW	Average dBpW	Quasi-peak dBpW	Average dBpW
200 to 300	Increasing linearly with the frequency from:							
	0 to 10	0	0 to 10	0	0 to 10	0	0 to 10	0

4.2.3. Description of the test set-up

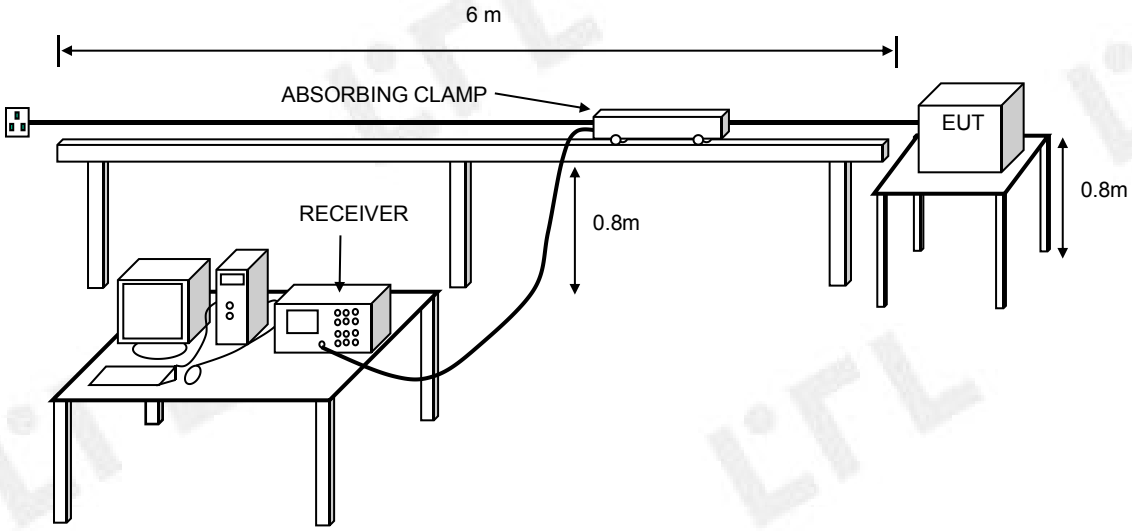

4.2.4. Test result

Frequency range	30-300MHz	Environmental conditions	Temperature	25℃
Detector function& Resolution bandwidth	Quasi-Peak 120kHz		Humidity	55.0%RH

The requirements are **Fulfilled**

Remarks: The limits are kept. For detailed results, please see the following page(s).

Shenzhen CTL Testing Technology Co., Ltd

Power Clamp Test EN 55014-1

EUT: NLUVZKZ2100
Manufacturer: NEVADA TRADING SRL
Operating Condition: WORKING
Test Site: /
Operator: ZGH
Test Specification: AC 220V/50Hz
Comment: /
Start of Test: 2020-5-25 / 10:35:03

SCAN TABLE: "POWER(30M-300M)FIN"
Short Description:

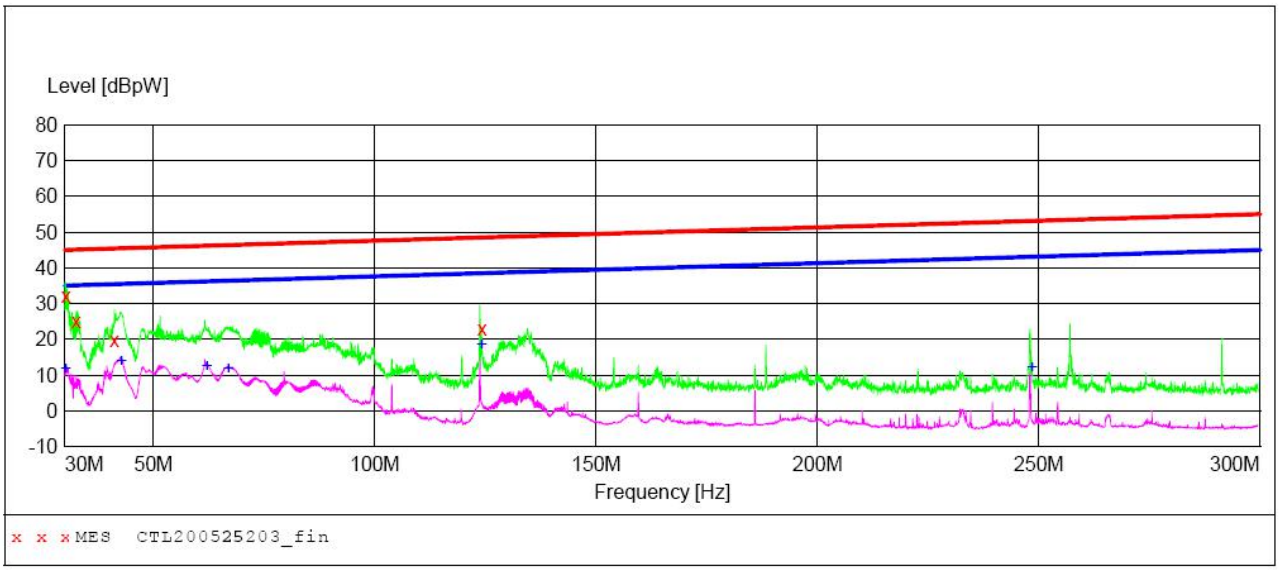

MEASUREMENT RESULT: "CTL200525203_fin"

2020-5-25 11:04

Frequency MHz	Level dBpW	Transd dB	Limit dBpW	Margin dB	Det.	Position cm
30.180000	32.10	0.8	45	12.9	QP	0.0
32.520000	25.30	1.0	45	19.8	QP	0.0
41.160000	19.80	3.8	45	25.6	QP	0.0
124.200000	22.90	-1.9	49	25.6	QP	0.0
134.460000	22.00	-1.9	49	27.0	QP	0.0

MEASUREMENT RESULT: "CTL200525203_fin2"

2020-5-25 10:39

Frequency MHz	Level dBpW	Transd dB	Limit dBpW	Margin dB	Det.	Position cm
30.180000	12.20	0.8	35	22.8	AV	0.0
42.780000	14.00	3.8	36	21.5	AV	0.0
62.100000	12.90	2.8	36	23.3	AV	0.0
66.900000	12.00	2.1	36	24.4	AV	0.0
124.200000	18.70	-1.9	39	19.8	AV	0.0
248.460000	12.40	-2.4	43	30.7	AV	0.0

4.3. Harmonic current

. For test instruments and accessories used see section 3.5.

4.3.1. Description of the test location

Test location: Harmonic & Flicker Test Room

4.3.2. Limits of harmonic current

Test configuration and procedure see clause 7.1 of standard EN 61000-3-2:2019

4.3.3. Description of the test set-up

The EUT shall operate in the mode of operation described in Section 2.3, and the maximum emanating results are recorded.

4.3.4. Test result

The test is not applicable.

4.4. Voltage fluctuations and flicker

For test instruments and accessories used see section 3.5.

4.4.1. Description of the test location

Test location: Harmonic & Flicker Test Room

4.4.2. Limits of Voltage Fluctuation and Flicker

Test configuration and procedure see clause 5 of standard EN 61000-3-3: 2013+A1: 2019.

4.4.3. Description of the test set-up

4.4.3.1. Operating Condition

The EUT shall operate in the mode of operation described in Section 2.3, and the maximum emanating results are recorded.

4.4.3.2. Configuration of test setup

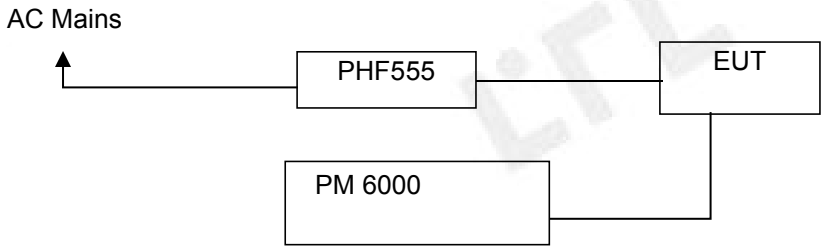

4.4.4. Test result

The requirements are **Fulfilled**

Remarks: The limits are kept. For detailed results, please see the following page(s).

CTL

Product:	NLUVZKZ2100	2020 May 27 16:33
Serial no:		Page 1 of 1
Description:		
Result Name:		

Voltech IEC61000-3 Windows Software 1.24.12		Test Date:	2020 May 27 14:30

Type of Test: Flickermeter Test - Table

Power Analyzer: Voltech PM6000 SN: 200006700717 Firmware Version: v1.22.07RC6

Channel(s):

1. SN: 090015502540, 28 Adjusted Date: 20 JUN 2013. 2. SN:None Adjusted Date:None

3. SN:None Adjusted Date:None 4. SN:None Adjusted Date:None

5. SN:None Adjusted Date:None 6. SN:None Adjusted Date:None

Shunt(s):

1. SN: 091024303148, 4 Adjusted Date: 20 JUN 2013. 2. SN:None Adjusted Date:None

3. SN:None Adjusted Date:None 4. SN:None Adjusted Date:None

5. SN:None Adjusted Date:None 6. SN:None Adjusted Date:None

AC Source: Mains / Manual Source

Overall Result: **PASS**

Notes:
Plt test duration 120 minutes
Measurement method - Voltage

	Plt
Limit	0.650
Reading	0.092

	Pst	dc (%)	dmax (%)	d(t) > 3.3%(ms)
Limit	1.000	3.300	4.000	500
Reading 1	0.092	0.000	0.519	0
Reading 2	0.092	0.000	0.516	0
Reading 3	0.092	0.000	0.523	0
Reading 4	0.092	0.000	0.517	0
Reading 5	0.092	0.000	0.514	0
Reading 6	0.092	0.000	0.519	0
Reading 7	0.092	0.000	0.519	0
Reading 8	0.092	0.000	0.520	0
Reading 9	0.091	0.000	0.516	0
Reading 10	0.092	0.000	0.516	0
Reading 11	0.092	0.000	0.517	0
Reading 12	0.092	0.000	0.520	0

4.5. Electrostatic discharge

For test instruments and accessories used see section 3.5.

4.5.1. Description of the test location and date

Test location: 1# EMC Test Room

Date of test: May 27, 2020

Operator: Li

4.5.2. Severity levels of electrostatic discharge

4.5.2.1. Severity level: Contact Discharge at ±4KV Air Discharge at±8KV

Level	Test Voltage Contact Discharge (KV)	Test Voltage Air Discharge (KV)
1	2	2
2	4	4
3	6	8
4	8	15
X	Special	Special

4.5.2.2. Performance criterion: B

4.5.3. Description of the test set-up

4.5.3.1. Operating Condition

The EUT shall operate in the mode of operation described in Section 2.3, and the results of the maximum susceptivity are recorded.

4.5.3.2. Test set-up

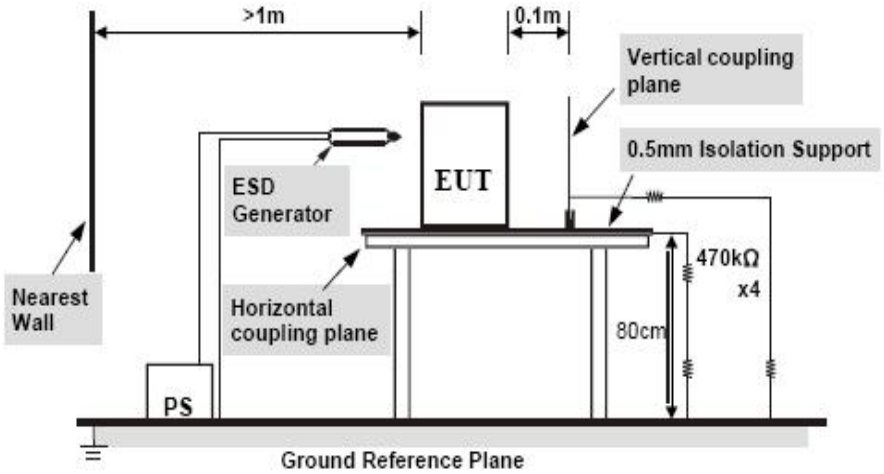

.

4.5.4. Test specification:

Contact discharge voltage: ■ 2 kV ■ 4 kV

Air discharge voltage: ■ 2 kV ■ 4 kV ■ 8 kV

Events(every polarity) /per point: ■ 10

Time between events: ■ 1 s

Type of discharge: Direct discharge ■ Air discharge ■ Contact discharge

Indirect discharge ■ Contact discharge

Polarity: ■ Positive ■ Negative

Discharge location:

■ all external locations accessible by hand

■ horizontal coupling plane (HCP)

■ vertical coupling plane (VCP)

4.5.5. Test result

Environmental conditions	Temperature	24℃
	Humidity	51.0%RH

The requirements are **Fulfilled** Performance Criterion: **B**

Remarks: During the test no deviation was detected to the selected operation mode(s).

4.6. Electrical fast transients / Burst

For test instruments and accessories used see section 3.5.

4.6.1. Description of the test location and date

Test location: 2# EMC Test Room

Date of test: May 27, 2020

Operator: Li

4.6.2. Severity levels of electrical fast transients / Burst

4.6.2.1. Severity level: ±1000V for AC power supply lines

Open circuit output test voltage and repetition rate of the impulses		
Level	On power port, PE	
	V peak(KV)	Repetition rate (KHz)
1.	0.5	5 or 100
2.	1	5 or 100
3.	2	5 or 100
4.	4	5 or 100
X	Special	Special

4.6.2.2. Performance criterion: B

4.6.3. Description of the test set-up

4.6.3.1. Operating Condition

The EUT shall operate in the mode of operation described in Section 2.3, and the results of the maximum susceptive results are recorded.

4.6.3.2. Test set-up

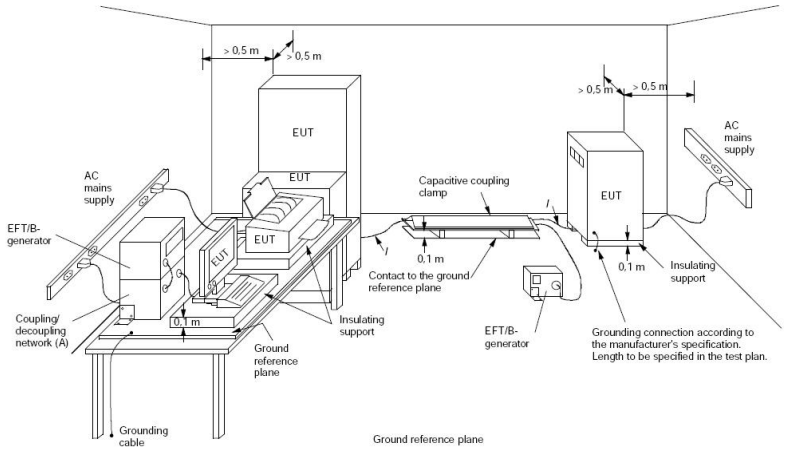

.

4.6.4. Test specification:

Coupling network: ■ 0.5 kV ■ 1 kV ☐ 2 kV

Coupling clamp: ☐ 0.5 kV ☐ 1 kV

Burst frequency: ■ 5.0 kHz

Coupling duration: ■ 120 s

Polarity: ■ positive ■ negative

4.6.5. Coupling points

Cable description: AC power line : L, N, PE, L+N, L+PE, N+PE, L+N+PE

Screening: o screened ■ unscreened
Status: o passive ■ active
Signal transmission: ■ analogue o digital
Length: ■ 0.8 m

4.6.6. Test result

Environmental conditions	Temperature	25℃
	Humidity	55.0%RH

The requirements are **Fulfilled** Performance Criterion: **B**

Remarks: During the test no deviation was detected to the selected operation mode(s).

4.7. Surge

For test instruments and accessories used see section 3.5.

4.7.1. Description of the test location and date

Test location: 2# EMC Test Room

Date of test: May 27, 2020

Operator: Li

4.7.2. Severity levels of surge

Level	Test Voltage (KV)
1	0.5
2	1.0
3	2.0
4	4.0
*	Special

4.7.2.1. Performance criterion: B

4.7.3. Description of the test set-up

4.7.3.1. Operating Condition

The EUT shall operate in the mode of operation described in Section 2.3, and the results of the maximum susceptive results are recorded.

4.7.3.2. Test set-up

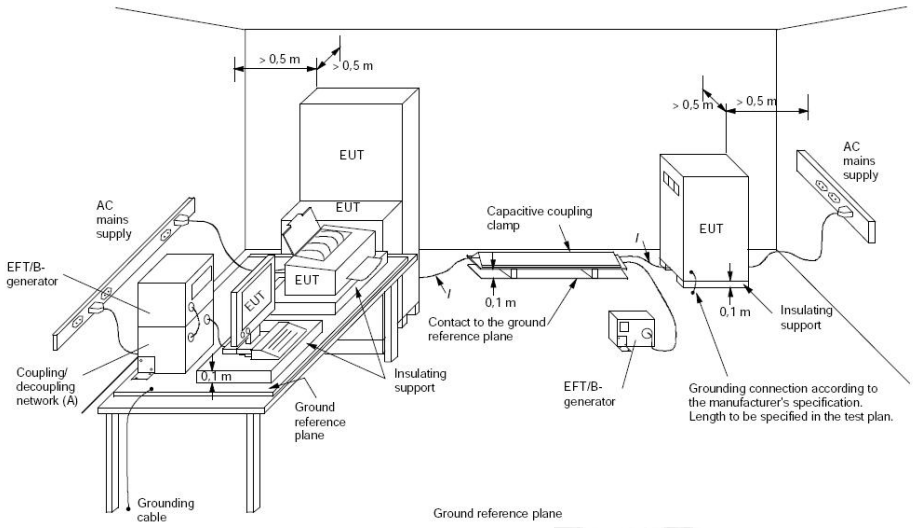

4.7.4. Test specification:

Pulse amplitude-Power line sym.: ■ 0.5 kV ■ 1 kV ☐ 2 kV ☐ 4 kV
Source impedance: 2 Ω

Pulse amplitude-Power line unsym: ■ 0.5 kV ■ 1 kV ■ 2 kV ☐ 4 kV
Source impedance: 12 Ω

Number of surges: ■ 5 Surges/Phase angle

Phase angle: ☐ 0 ° ■ 90 ° ☐ 180 ° ■ 270 °

Repetition rate: ■ 60 s

Polarity: ■ positive ■ negative

4.7.5. Coupling points

Cable description: AC power line: L+N, N+PE, L+PE

Screening: o screened ■ unscreened
Status: o passive ■ active
Signal transmission: ■ analogue o digital
Length: ■ 0.8 m

4.7.6. Test result

Environmental conditions	Temperature	25℃
	Humidity	55.0%RH

The requirements are **Fulfilled** Performance Criterion: **B**

Remarks: During the test no deviation was detected to the selected operation mode(s).

4.8. Conducted disturbances induced by radio-frequency fields

For test instruments and accessories used see section 3.5.

4.8.1. Description of the test location date

Test location: 3# EMC Test Room

Date of test: May 27, 2020

Operator: Li

4.8.2. Severity levels of conducted disturbances induced by radio-frequency fields

4.8.2.1. Severity Level: 3V

Level	Field Strength （V）
1.	1
2.	3
3.	10
X	Special

4.8.2.2. Performance criterion: A

4.8.3. Description of the test set-up

4.8.3.1. Operating Condition

The EUT shall operate in the mode of operation described in Section 2.3, and the results of the maximum susceptive results are recorded.

4.8.3.2. Test set-up

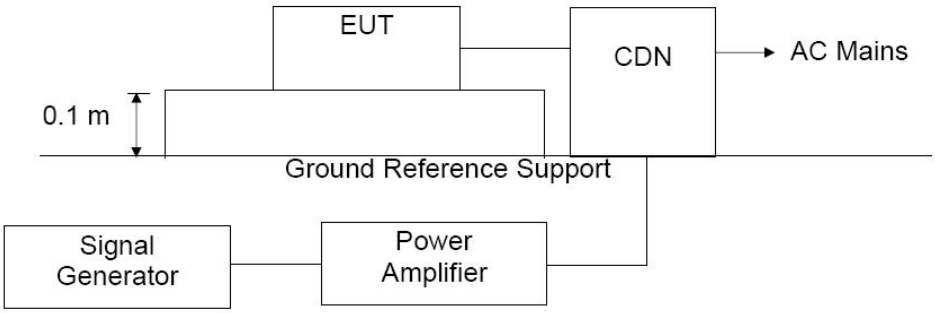

4.8.4. Test specification:

Frequency range: ■ 0.15 MHz to 230 MHz

Test voltage: ■ 3 V

Modulation: ■ AM: 80 %
■ sinusoidal 1000Hz

Frequency step: ■ 1 % with 1 s dwell time

4.8.5. Coupling points

Cable description (Port1): AC power line

Screening: o screened ■ unscreened
Status: o passive ■ active
Signal transmission: ■ analogue o digital
Length: ■ 0.8 m

4.8.6. Test result

Environmental conditions	Temperature	25℃
	Humidity	55.0%RH

The requirements are **Fulfilled** Performance Criterion: **A**

Remarks: During the test no deviation was detected to the selected operation mode(s).

4.9. Voltage dips and short interruptions

For test instruments and accessories used see section 3.5.

4.9.1. Description of the test location and date

Test location: 2# EMC Test Room

Date of test: May 27, 2020

Operator: Li

4.9.2. Severity levels of voltage Dips and Interruptions

Test Level (%Ut)	Voltage Dip And Short Interruptions (%Ut)	Performance Criterion	Duration (In Period)
0	100	C	0.5
70	30	C	25
40	60	C	10

4.9.3. Description of the test set-up

4.9.3.1. Operating Condition

The EUT shall operate in the mode of operation described in Section 2.3, and the results of the maximum susceptive results are recorded.

4.9.3.2. Test set-up

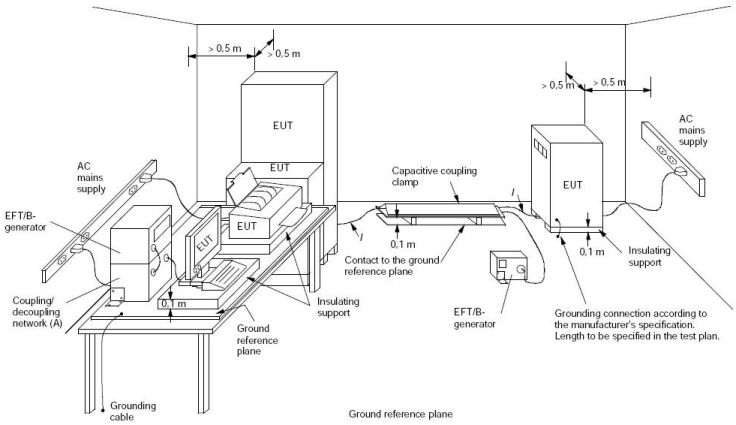

4.9.4. Test specification:

Nominal Mains Voltage (V_N): ■ 220 V AC

Number of voltage fluctuations: ■ 3

Level of reduction(dip) / duration: ■ 100 % / 10ms ■ 30 % / 500ms ■ 60 % / 200ms

4.9.5. Test result

Environmental conditions	Temperature	25℃
	Humidity	55.0%RH

The requirements are **Fulfilled** Performance Criterion :C

Remarks: During the test no deviation was detected to the selected operation mode(s).

5. Test Setup Photos

DISTURBANCE POWER TEST

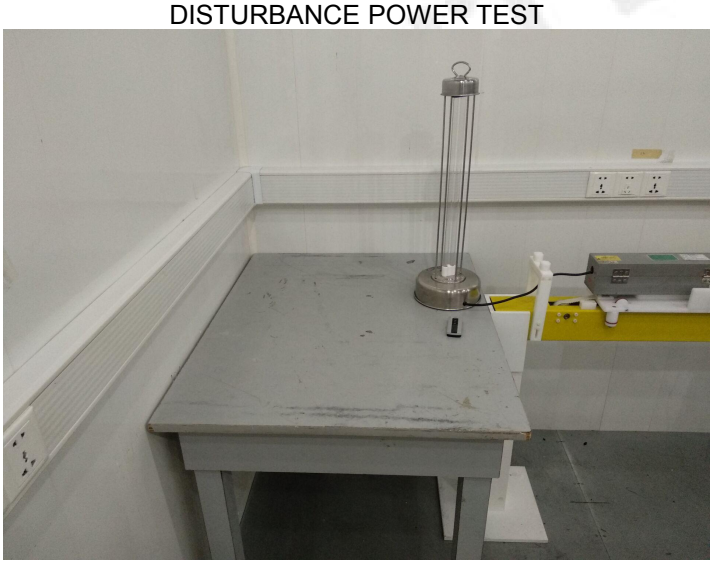

CONDUCTION EMISSION TEST(0.15MHz-30MHz)

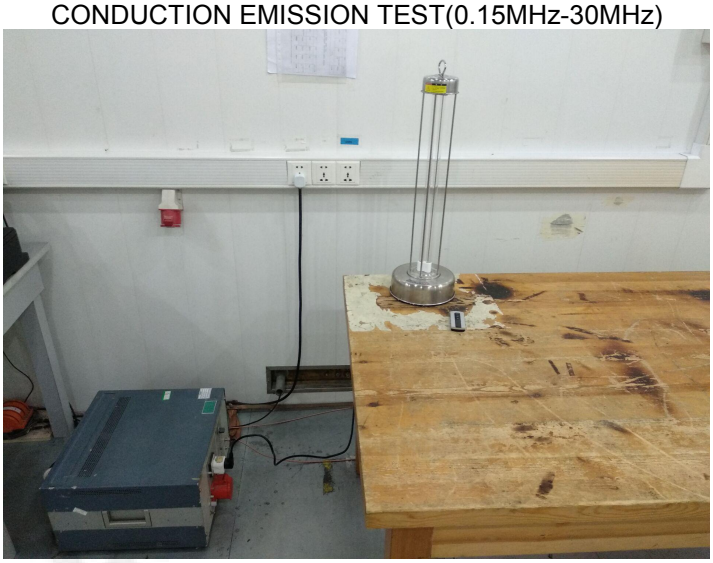

HARMONIC & FLICKER TEST

ESD TEST

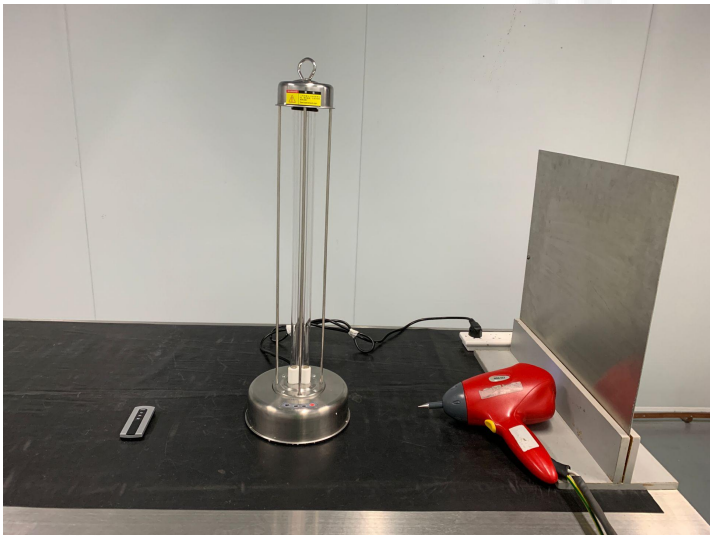

EFT TEST&SURGE TEST&VOLTAGE DIPS AND INTERRUPTIONS TEST

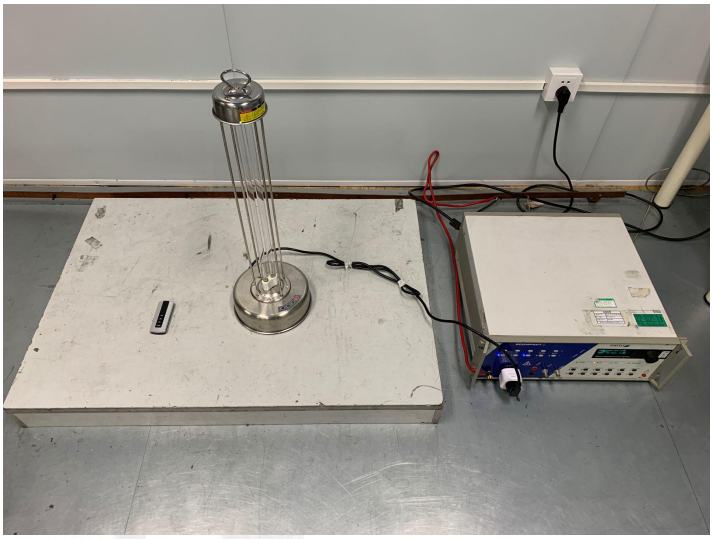

CONDUCTED SUSCEPTIBILITY TEST

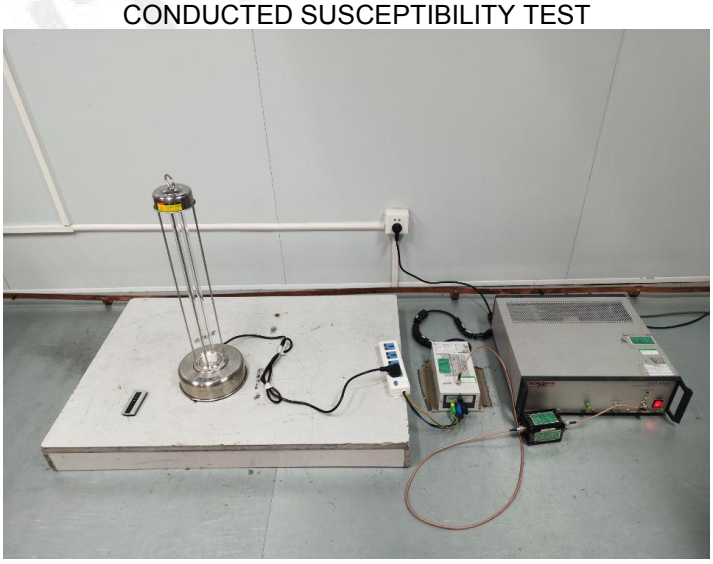

6. Photos of the EUT

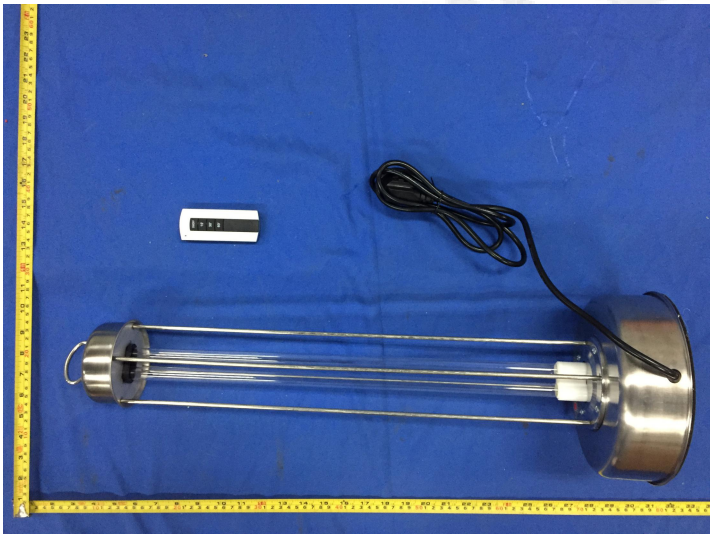

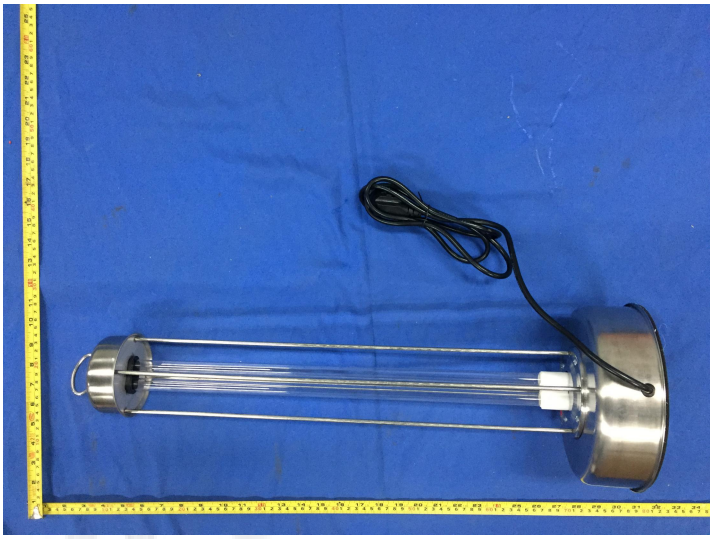

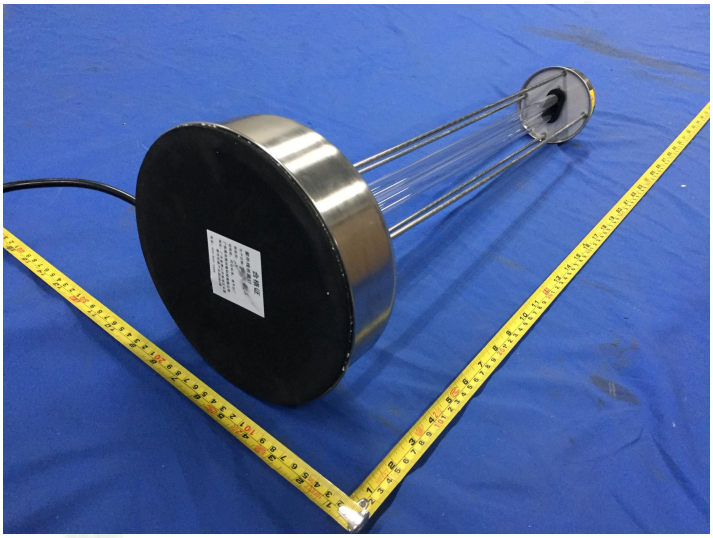

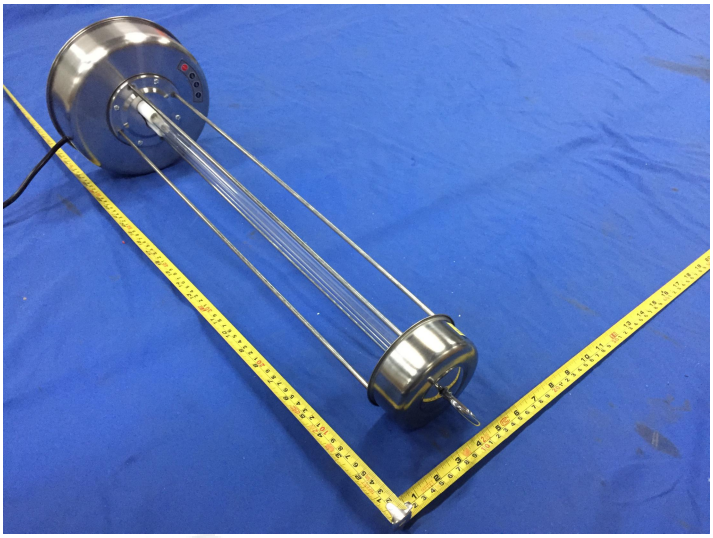

.....End of Report.....